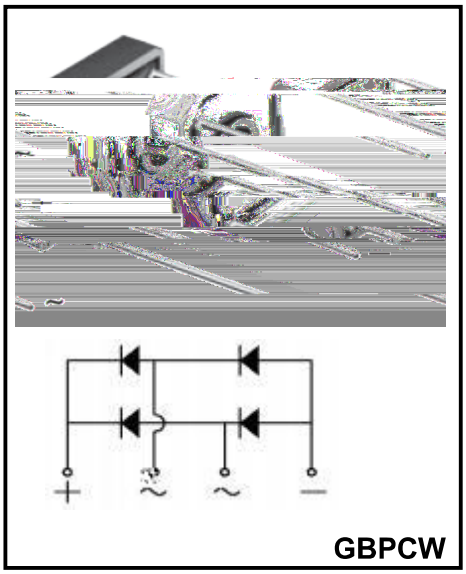

- Glass passivated chip
- Low reverse leakage current
- High surge current capability

- Electric welder
- Industrial power supply
- Inverter
- Uninterruptible power supply

- Case:GBPC-W
- Polarity: Polarity symbols being marked on body
- Mounting torque:12.0 kgf.cm max
- Weight: About12 grams

Maximum Repetitive Peak Reverse Voltage		600	800	1000	1200	
Maximum RMS voltage		420	560	700	840	
Maximum DC Blocking Voltage		600	800	1000	1200	
Average rectifiedoutputcurrent with heatsink, T_C =85		10				
Peak surge forward current, 8.3mssingle half sine-wave superimposed on rated load		150				
Rating for fusing1ms<t<8.3ms Tj=25 , Rating of per diode		300				
Operating Temperature Range		-55 to +150				
Storage Temperature Range		-55 to +150				
Dielectric strengthterminals to case AC 1 minute		2.5				
Peak Forward Voltage I_F =5A		1.1				
Peak Reverse Current Tj=25 VR=VRRM ,Pulse measurementRating of per diode Tj=125		5 500				
Junction to ambientthermalresistance,without heatsink		26				
Junction to casethermalresistance, with heatsink		1.5				

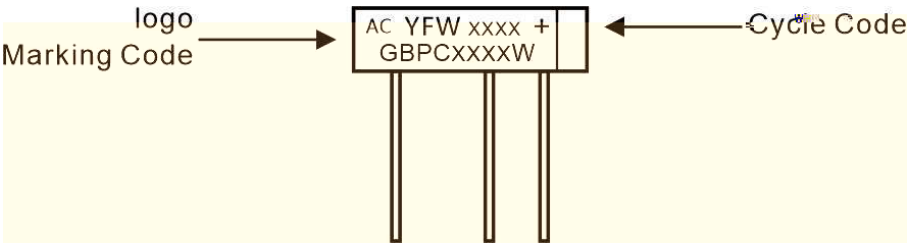

	bulk	50PCS/Box 500PCS/Carton

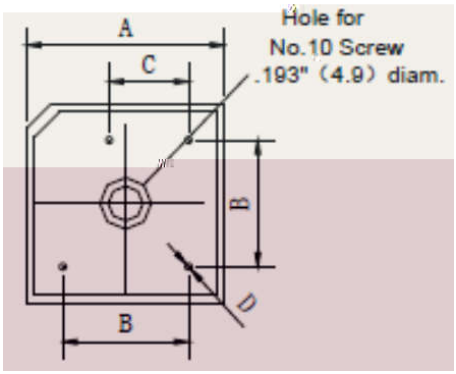

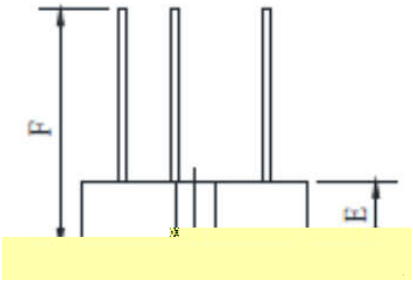

A	28.2	28.8	1.11	1.13
B	17.1	19.1	0.67	0.75
C	10.4	12.4	0.41	0.49
D	0.95	1.05	0.04	0.04
E	7.6	8.2	0.30	0.32
F	30	/	1.18	/