Fast Recovery Epi Diodes

Reverse Voltage - 1200 V

Forward Current - 30 A

Features

- High frequency operation
- High surge forward current capability
- High purity, high temperature epoxy encapsulation for enhanced mechanical strength and moisture resistance
- Guard ring for enhanced ruggedness and long term reliability

Mechanical Data

- Case: TO-220AC
- RoHS co

Fig.1 Reverse Recovery Time Characteristic And Test Circuit Diagram

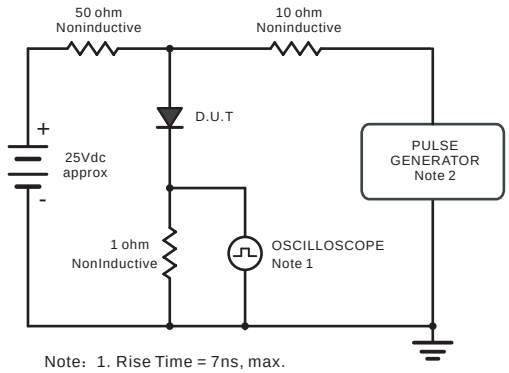

Note: 1. Rise Time = 7ns, max.
Input Impedance = 1megohm,22pF.
2. Ries Time =10ns, max.
Source Impedance = 50 ohms.

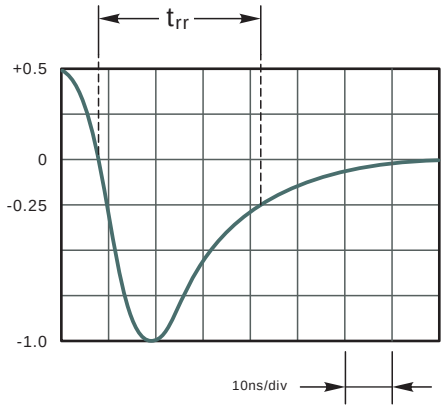

Set time Base for 10ns/div

Fig.2 Typical Forward Current Derating Curve

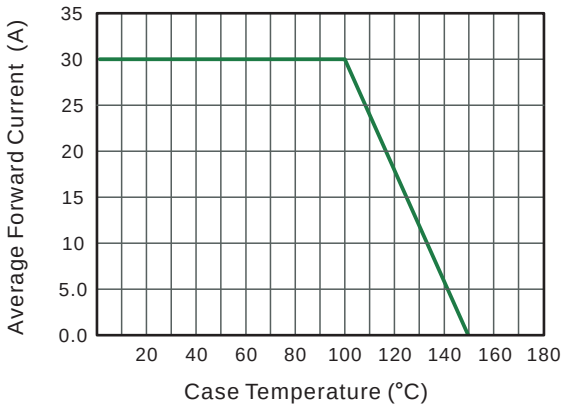

Fig.3 Typical Reverse Characteristics

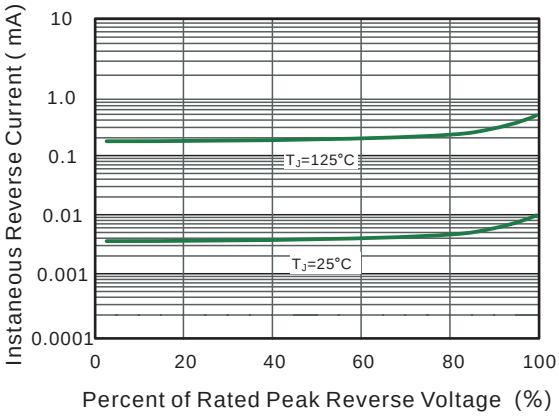

Fig.4 Typical Forward Characteristic

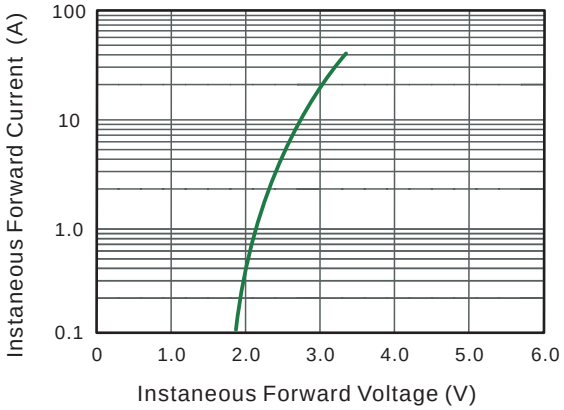

Fig.5 Maximum Non-Repetitive Peak Forward Surage Current

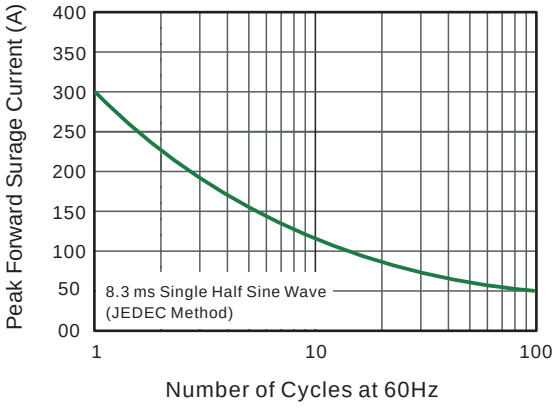

Marking Diagram

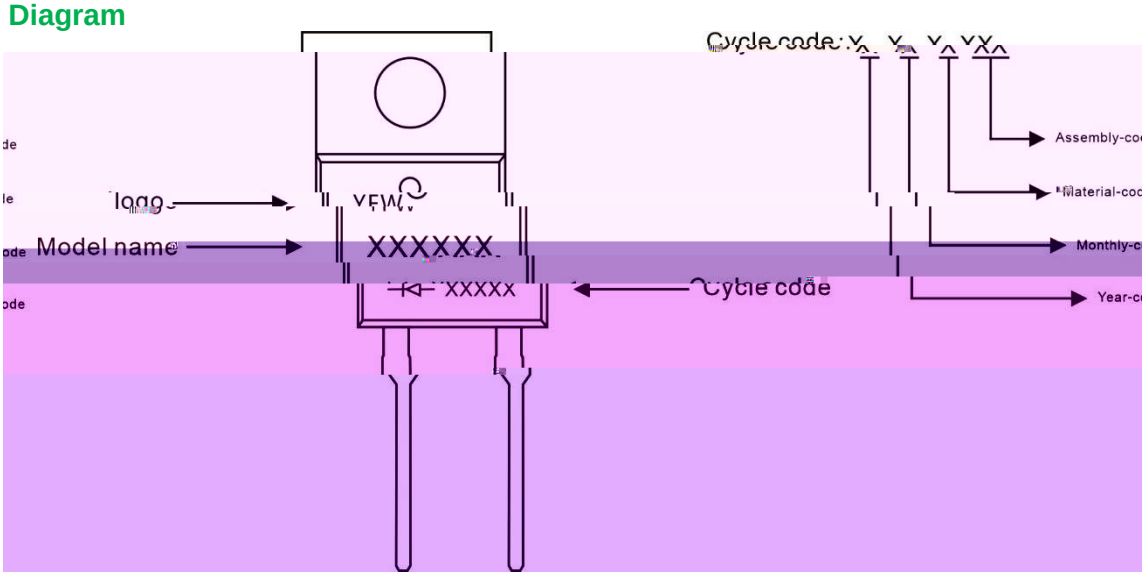

Ordering information

Model name	Package	Unit Weight	Base Quantity	Packing Quantity
MUR30120AC				

Package Dimensions

TO-220AC

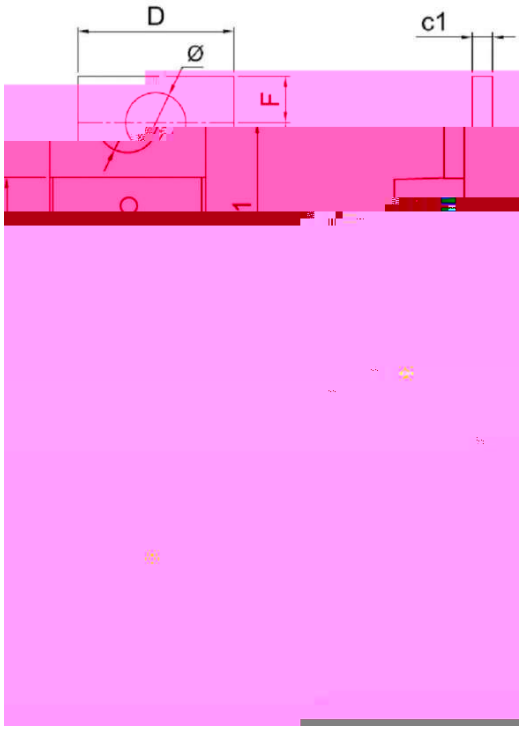

The information presented in this document is for reference only. GuangDong Youfeng Microelectronics Co.,Ltd. reserves the right to make changes without notice for the specification of the products displayed herein to improve reliability, function or design or otherwise. The product listed herein is designed to be used with ordinary electronic equipment or devices, and not designed to be used with equipment or devices which require high level of reliability and the malfunction of with would directly endanger human life (such as medical instruments, transportation equipment, aerospace machinery, nuclear-reactor controllers, fuel controllers and other safety devices),YFW or anyone on its behalf, assumes no responsibility or liability for any damages resulting from such improper use of sale. This publication supersedes & replaces all information previously supplied. For additional information, please visit our website https://www.yfwdiode.com, or consult YFW sales office for further assistance.