Marking Diagram

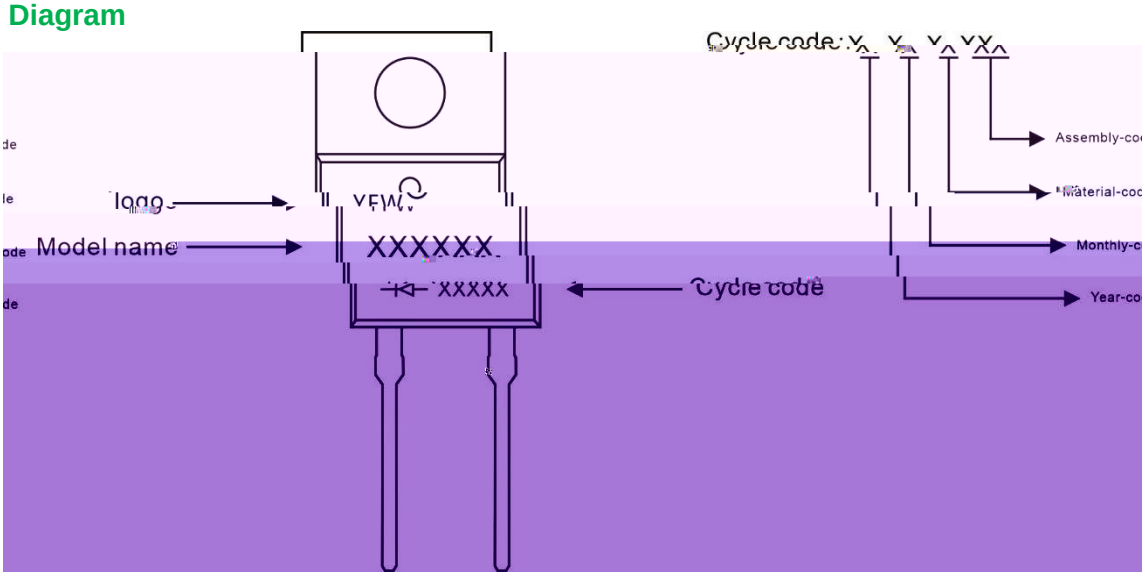

Ordering information

Model name	Package	Unit Weight	Base Quantity	Packing Quantity
	TO-220AC	0.067oz(1.9g)	50pcs/tube	1000PCS/Box 5000PCS/Carton

Package Dimensions

TO-220AC

