

- Easy pick and place
- For surface mounted applications
- Low profile package
- Built-in strain relief
- Lead free in comply with EU RoHS 2011/65/EU directives

- Case: SOD-123FL
- Terminals: Solderable per MIL-STD-750, Method 2026
- Approx. Weight: 15mg / 0.00053oz

Fig.1

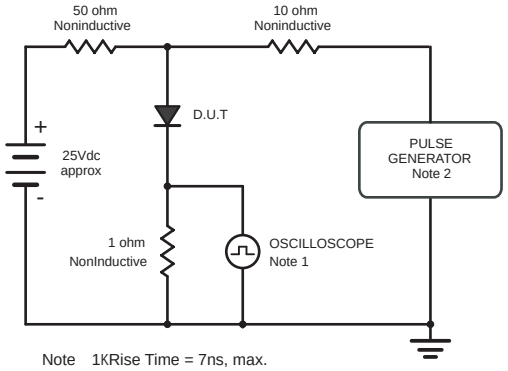

Note 1KRise Time = 7ns, max.
Input Impedance = 1megohm,22pF.
2. Ries Time =10ns, max.
Source Impedance = 50 ohms.

Fig.3 Typical Reverse Characteristics

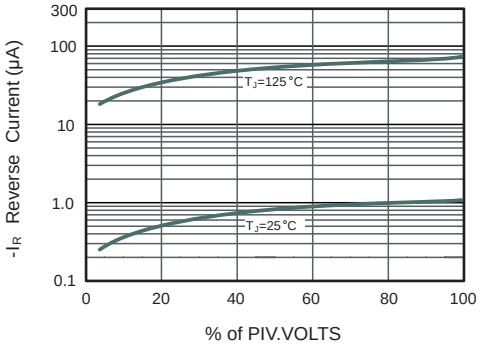

Fig.4 Typical Forward Characteristics

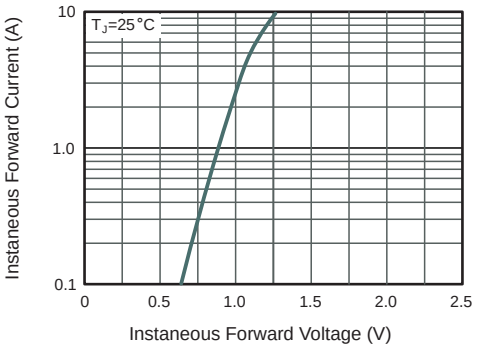

Fig.5 Typical Junction Capacitance

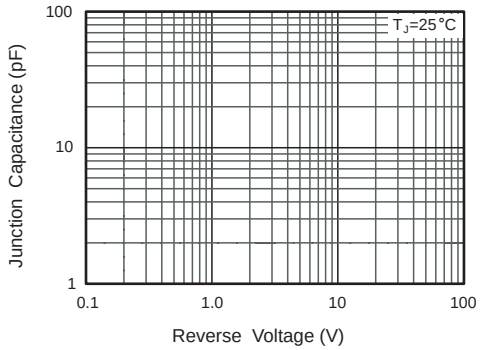

Marking Diagram

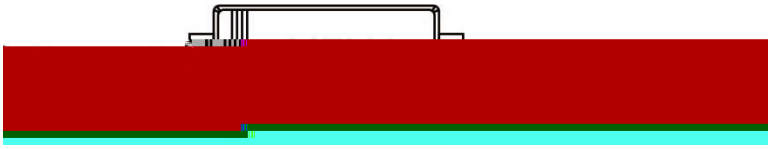

Ordering information

Package	Packing Description	Packing Quantity
SOD-123FL	Tape/Reel,7"reel	3000PCS/Reel 120000PCS/Carton

Package Dimensions

SOD-123FL

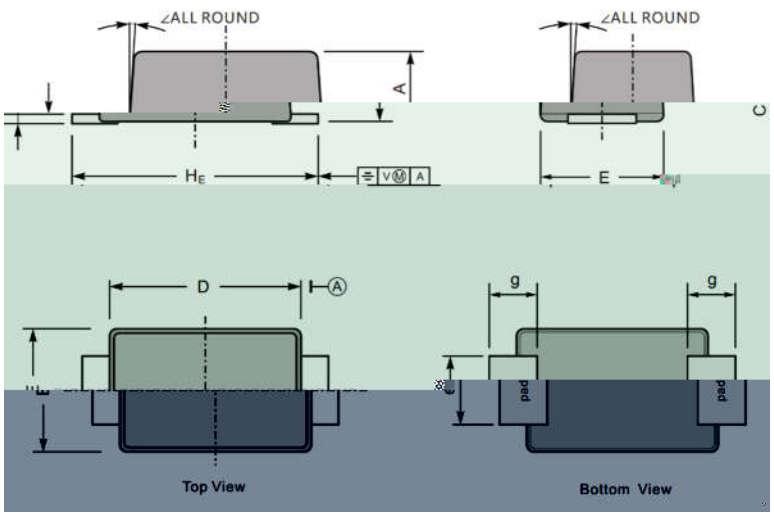

Dim.	Millimeter(mm)		mil	
	Min.	Max.	Min.	Max.
A	0.9	1.3	35	43
C	0.12	0.20	4.7	7.9
D	2.6	2.9	102	114
E	1.7	1.9	67	75
e	0.8	1.1	31	43
g	0.7	0.9	28	35
HE	3.5	3.8	138	150
∠	7°			

The recommended mounting pad size

