1A 4Quadrants TRIAC

Product Summary

Symbol	Value	Unit
$I_{T(RMS)}$	1	A
V_{DRM} V_{RRM}	600/800	V
V_{TM}	1.55	V

FEATURES

- NPNPN five-layer structure silicon bidirectional device
- P-type counter-diffusion isolation
- Mesa glass passivation process
- Multi-layer metal back electrode
- RoHS compliant

APPLICATIONS

- Heat

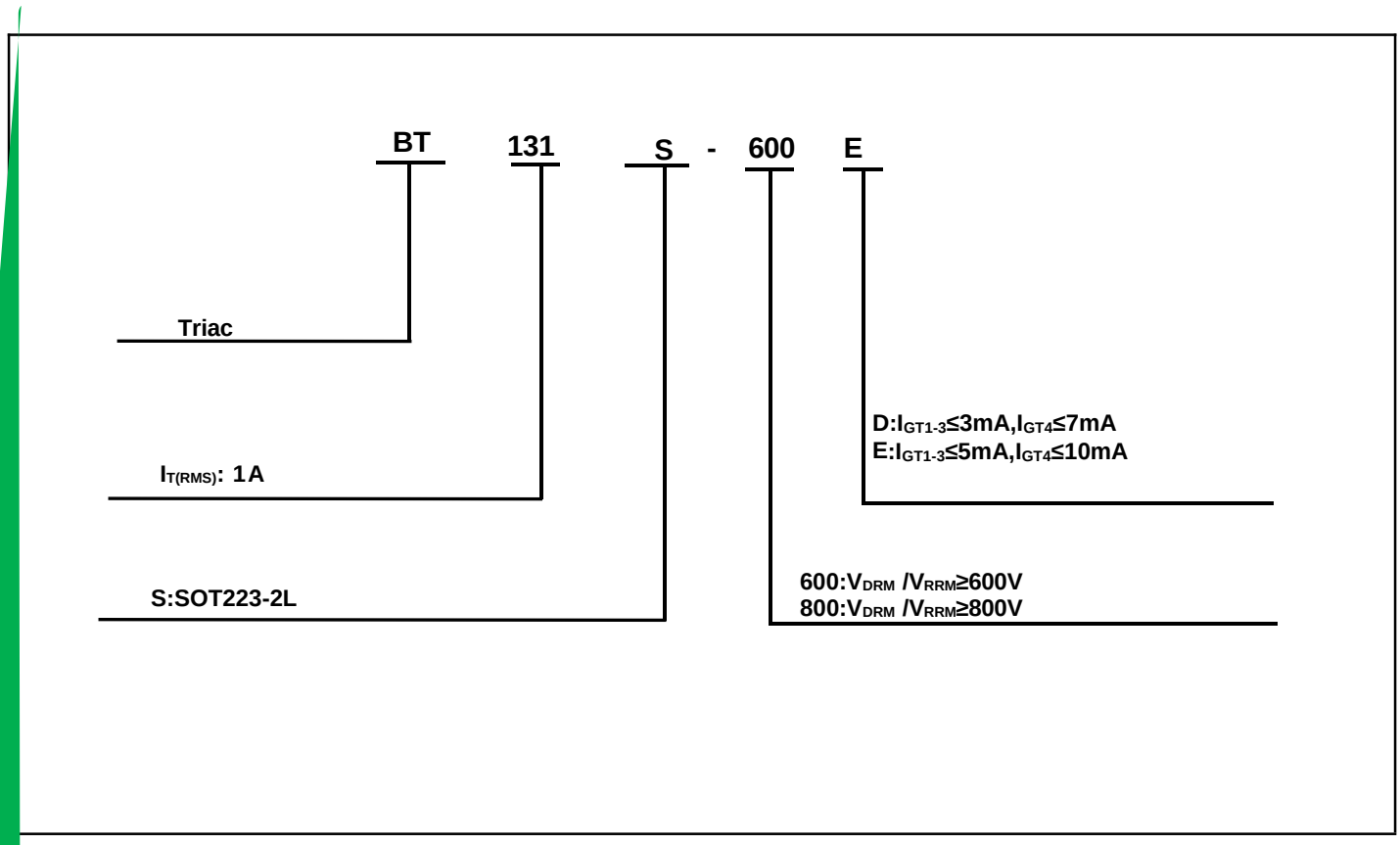
BT
131
S
-
600
E
Triac
IT(RMS): 1A
S:SOT223-2L
D:IGT1-3≤3mA,IGT4≤7mA
E:IGT1-3≤5mA,IGT4≤10mA
600:VDRM /VRRM≥600V
800:VDRM /VRRM≥800V

	Tape/Reel,7”reel	1000pcs/Reel	6000PCS/Box 30000PCS/Carton
	Tape/Reel,13”reel	2500pcs/Reel	5000PCS/Box 30000PCS/Carton

1.2mm

Disclaimer

The information presented in this document is for reference only. GuangDong Youfeng Microelectronics Co.,Ltd. reserves the right to make changes without notice for the specification of the products displayed herein to improve reliability, function or design or otherwise. The product listed herein is designed to be used with ordinary electronic equipment or devices, and not designed to be used with equipment or devices which