Package	Packin

TO-92

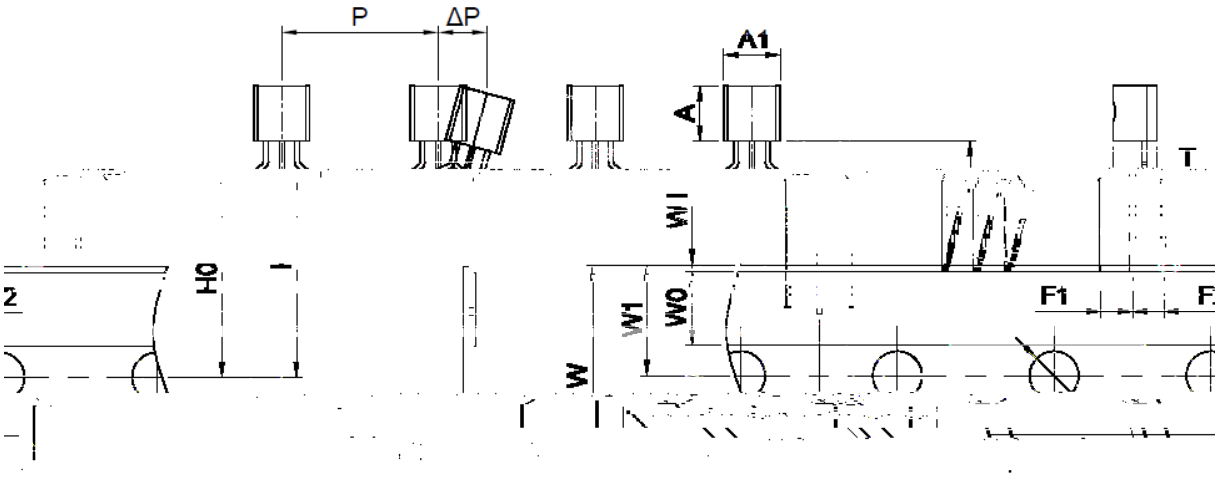

Dimiensions are in millimeter								
A	A1	T	P	P0	P2	F1	F2	W
4.6	4.6	3.5	12.7	12.7	6.35	2.54	2.54	18.0
W0	W1	W2	H	H0	D0	t1	T2	
6.0	9.0	1.0Max	19.0	18.0	4.0	0.4	0.2	0

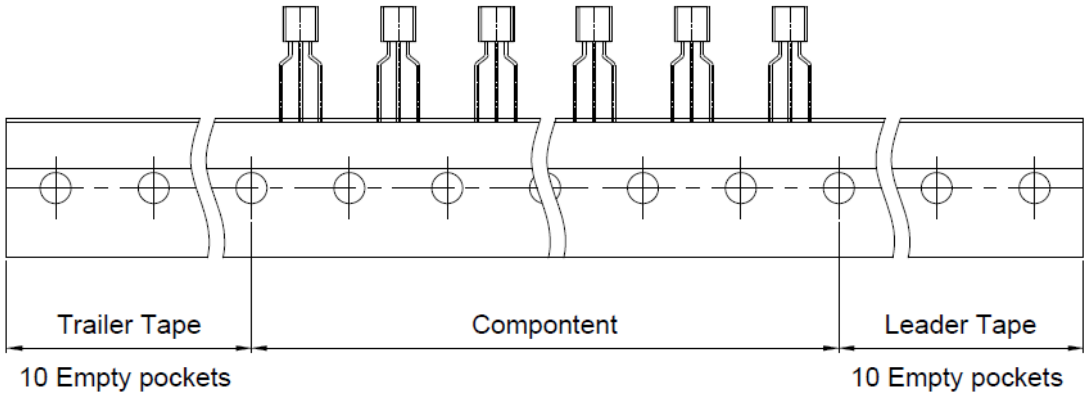

Discl