**ULTRAFST RECOVERY RECTIFIERS**

**Reverse Voltage - 600 V**

**Forward Current - 30 A**

## FEATURES

- High speed switching capability
- High current capability
- High forward surge capability
- Low power losses  High efficiency
- High reliability
- For use in low voltage, high frequency inverters

## MECHANICAL DATA

- Case: TO-220AB/CT TO-220F/FCT TO-263/DC
- Solder bath temperature275  maximum,10s per JESD22-106

## Primary Characteristic

| | |
|---|---|
| $I_o$ | **2*15A** |
| $V_{RRM}$ | **600V** |
| $I_{FSM}$ | **270A** |
| $V_F$ | **1.09V** |
| $T_J$ **Max** | **175ÁC** |

## Maximum Ratings (Per Leg) at Ta=25ÁC unless otherwise specified

| Parameter | Symbols | Value | Units |
|---|---|---|---|
| Maximum Repetitive Peak Reverse Voltage | $V_{RRM}$ | 600 | **V** |
| Maximum RMS voltage | | | |

## Marking Diagram

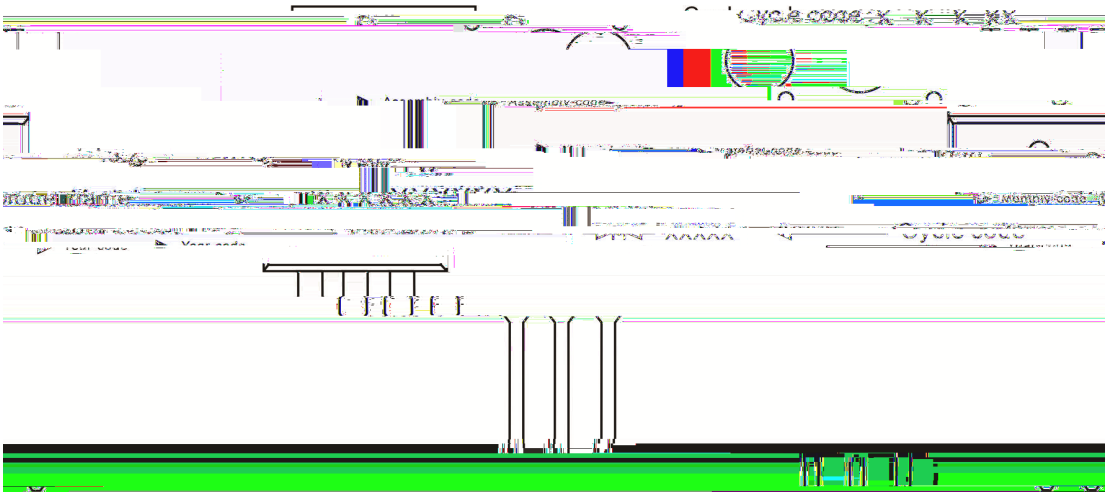

## Ordering information

| Model name | Package | Unit Weight | Base Quantity | Packing Quantity |
|---|---|---|---|---|
| **MUR3060FCT** | TO-220F | 0.06oz(1.74g) | 50pcs/tube | 1000PCS/Box 5000PCS/Carton |

## Package Dimensions

**TO-220F**

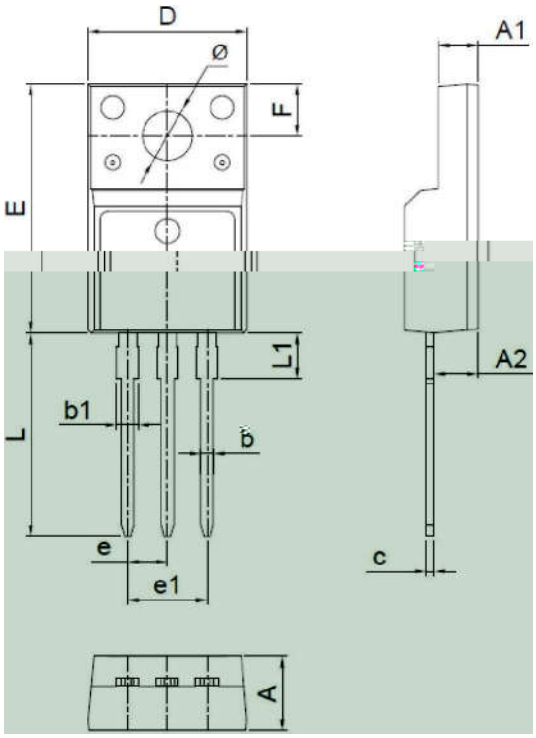


| Symbol | Millimeter | | Inches | |
|---|---|---|---|---|
| | Min. | Max. | Min. | Max. |
| A | 4.50 | 4.90 | 0.177 | 0.193 |
| A1 | 2.34 | 2.74 | 0.092 | 0.108 |
| A2 | 2.66 | 2.86 | 0.105 | 0.113 |
| b | 0.75 | 0.85 | 0.030 | 0.033 |
| b1 | 1.24 | 1.44 | 0.049 | 0.057 |
| c | 0.40 | 0.60 | 0.016 | 0.024 |
| D | 10.00 | 10.32 | 0.394 | 0.406 |
| E | 15.75 | 16.05 | 0.620 | 0.632 |
| e | 2.44 | 2.64 | 0.096 | 0.104 |
| e1 | 4.88 | 5.28 | 0.192 | 0.208 |
| F | 3.10 | 3.5 | 0.122 | 0.138 |
| L | 13.50 | 13.90 | 0.531 | 0.547 |
| L1 | 2.90 | 3.30 | 0.114 | 0.130 |
| Φ | 3.10 | 3.30 | 0.122 | 0.130 |

## Marking Diagram

## Ordering information

| Model name | Package | Unit Weight | UnitgD g · el ht l' № "Y l я ´ |
|---|---|---|---|

The information presented in this document is for reference only. GuangDong Youfeng Microelectronics Co.,Ltd. reserves the right to make changes without notice for the specification of the products displayed herein to improve reliability, function or design or otherwise. The product listed herein is designed to be used with ordinary electronic equipment or devices, and not designed to be used with equipment or devices which require high level of reliability and the malfunction of with would directly endanger human life (such as medical instruments, transportation equipment, aerospace machinery, nuclear-reactor controllers, fuel controllers and other safety devices),YFW or anyone on its behalf, assumes no responsibility or liability for any damages resulting from such improper use of sale. This publication supersedes & replaces all information previously supplied. For additional information, please visit our website https://www.yfwdiode.com, or consult YFW sales office for further assistance.