**SIC SCHOTTKY BARRIER DIODE**

**Reverse Voltage - 650 V**

**Forward Current - 4 A**

## FEATURES

## APPLICATIONS

## BENEFITS

**TO-25**

## Electrical Characteristics unless otherwise specified

| Parameter | Symbol | Value | | | Unit |
|---|---|---|---|---|---|
| | | Min | Typ | Max | |
| | $V_{DC}$ | | | | V |
| | $V_F$ | | | | V |
| | $I_R$ | | | | |

## RATINGS AND CHARACTERISTIC CURVES

**Figure 1. $V_F$ Typical Forward Characteristics**
$I_F$ = 0~8A
$T_{VJ}$ ranges from -55 ℃ to 175 ℃

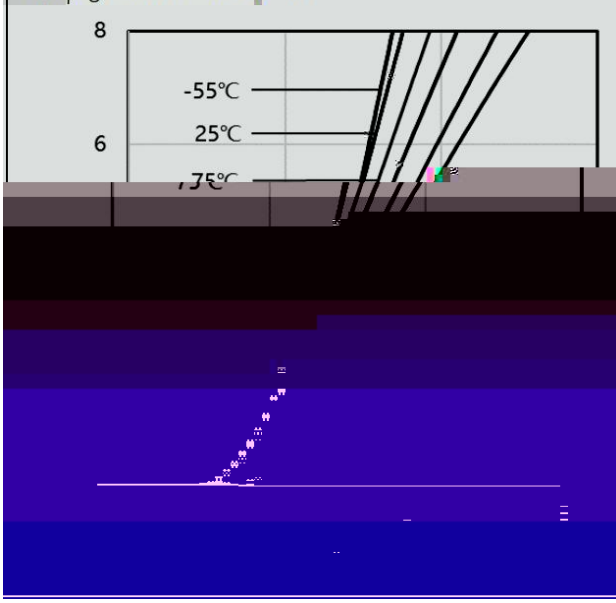


**Figure 2. $I_R$ Typical Reverse Characteristics**
$V_R$ = 300~700 V
$T_{VJ}$ ranges from 25 ℃ to 175 ℃

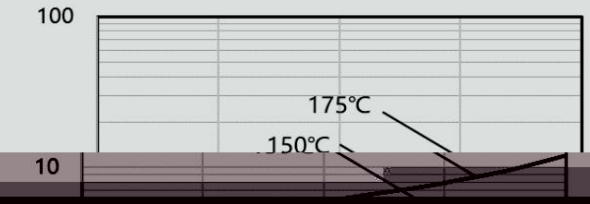


**Figure 3. Total Capacitance Charge Characteristics**
$V_R$ = 0~650 V



**Figure 4. Total Capacitance Characteristics**
$V_R$ = 0~650 V

## RATINGS AND CHARAC

M

# Disclai