Telecommunication Protection

Reverse Voltage - 62 to 270V

Power Dissipation: 1.7 W

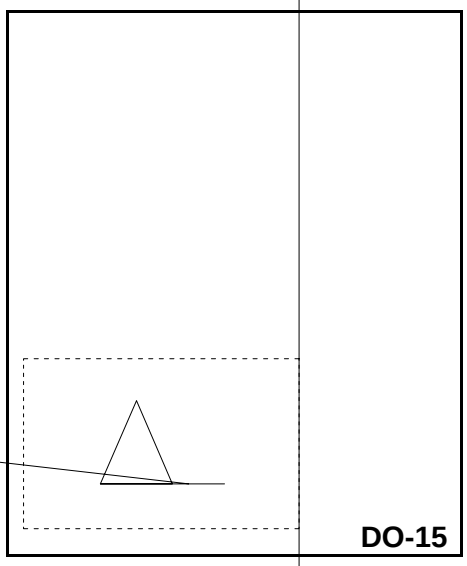

DESCRIPTION

Type	I_{RM} @ V_{RM} max.		V_{BR} @ I_R min.		V_{BO} @ I_{BO} max. note1		I_H min. note2	C max. note3
	μA	V	V	mA	V	mA	mA	PF

TEST CIRCUIT 1 FOR IBO AND VBO PARAMETERS:

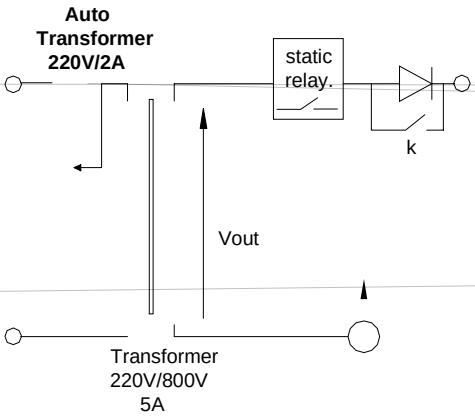

TEST PROCEDURE :

TEST CIRCUIT 2 FOR IH PARAMETER:

TEST PROCEDU

Ordering information

Package	Packing Description	Packing Quantity
DO-15	bulk	500PCS/Inner Box 30000PCS/Carton
	ammo pack	3000PCS/Inner Box 30000PCS/Carton

Package Dimensions

DO-15

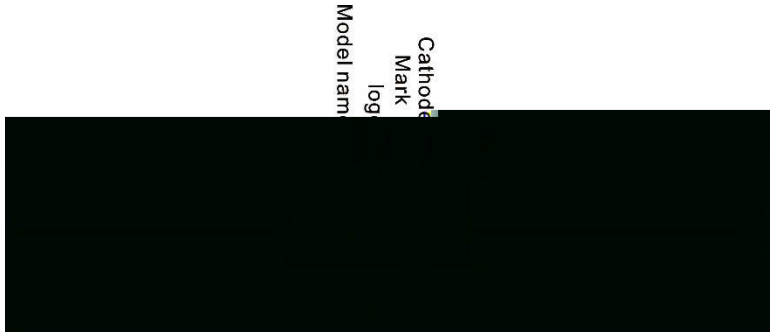

Dim.	Millimeter(mm)		INCHES	
	Min.	Max.	Min.	Max.
A	5.80	7.60	0.230	0.300
B	2.60	3.60	0.104	0.140
C	0.71	0.86	0.028	0.034
D	25.4	-	1.00	-