- High voltage
- High speed switching

- High Speed Switching
- Suitable for Switching Regulator and Motor Control

- Case: Molded plastic
- Polarity: As marked
- Mounting Position: Any
- Molded Plastic: UL Flammability Classification Rating 94V-0
- Lead free in compliance with EU RoHS 2011/65/EU directive
- Solder bath temperature275 maximum,10s per JESD22-106

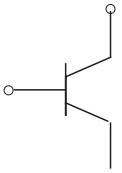

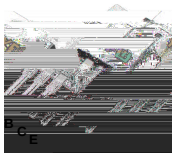

TO-220AB

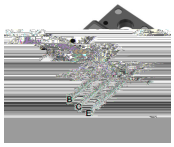

TO-220F

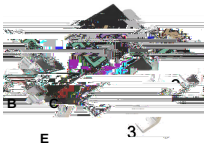

TO-263

Collector Base Voltage		700	
Collector Emitter Voltage		400	
Emitter Base Voltage		9	
Collector Current		1.5	
Thermal Resistance from Junction to Ambient		62.5	
Power Dissipation (Tc = 25 °C) Superimposed on Rated Load (JEDEC method)		1.5	
Operating Temperature Range		150	
Storage Temperature Range		-55 to +150	

DC Current Gain at V_{CE} = 5 V, I_C = 0.5 A		15	-	30	
Collector Base Cutoff Current at V_{CB} = 700 V		-	-	10	
Collector Emitter Cutoff Current at V_{CE} = 400 V		-	-	10	
Emitter Base Cutoff Current at V_{EB} = 9 V		-	-	10	
Collector Emitter Saturation Voltage at I_C = 1 A, I_B =200mA		-	-	0.6	
Base Emitter Saturation Voltage at IC = 1.5 A, IB =250mA		-	-	1.2	
Transition Frequency at V_{CE}=10V ,I_C=100mA f=1MHZ		5	-	-	

Marking Diagram

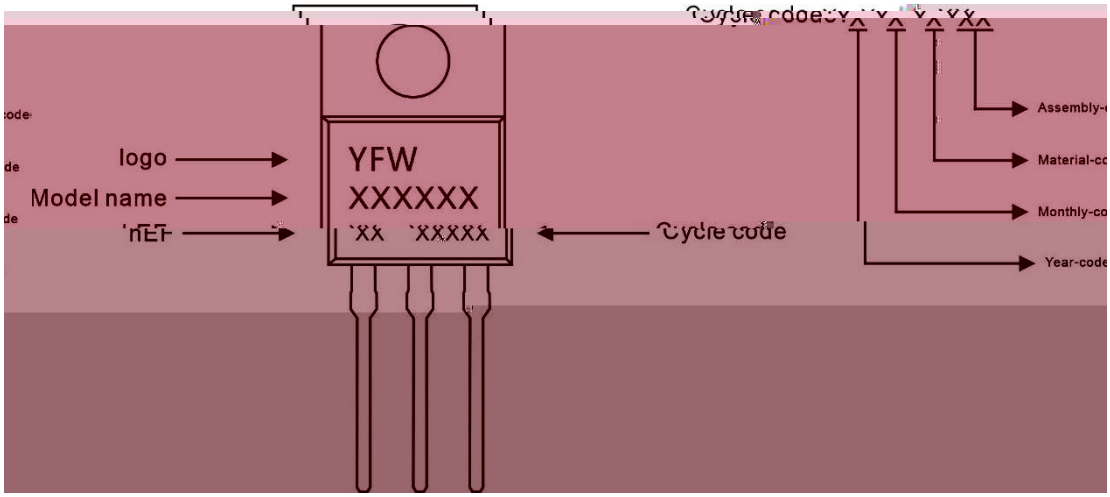

YFW13003AT	!!"#$%	"&"'()*+&,-./%%	0"12345678%%	+"""9:;4$(<%0"""9:;4:=>5(?%

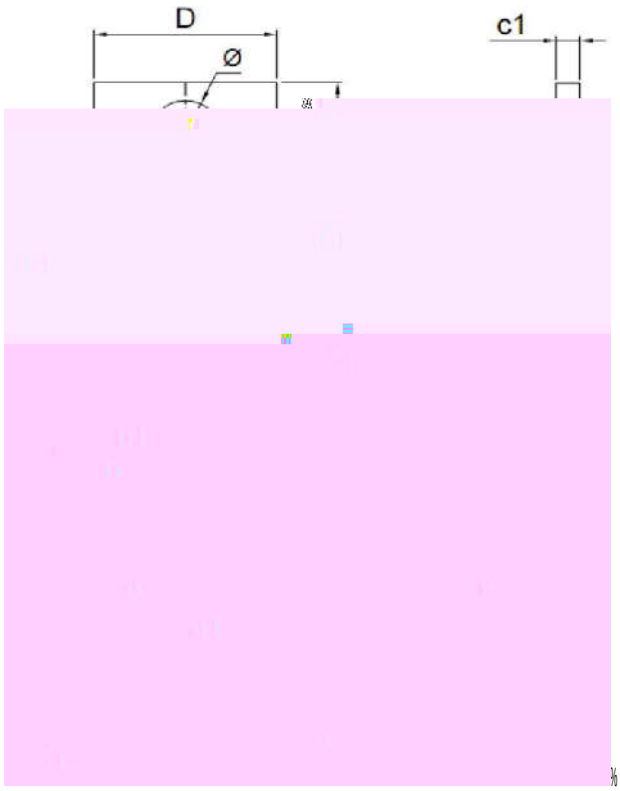

#%	@&A"%	@&'"%	"&+-,%	"&+B0%
#+%	!&0!%	!&B!%	"&",,%	"&+++%
7%	"&'+%	"&,+%	"&"!B%	"&"A-%
7+%	+&+'%	+&A'%	"&"@-%	"&"0@%
2%	"&A"%	"&0"%	"&"+!%	"&"!"%
2+%	+&+'%	+&A'%	"&"@-%	"&"0@%
C%	,&,"%	+"&!"%	"&A,"%	"&@"!%
D%	B&0"%	B&,"%	"&AA0%	"&A0"%
D+%	+!&""%	+!&0"%	"&@'!%	"&@,!%
8%	!&@@%	!&-@%	"&",-%	"&+"@%
8+%	@&BB%	0&!B%	"&+,!%	"&!"B%
E%	!&-"%	!&B"%	"&+"!%	"&++"%
F%	+A&!"%	+A&B"%	"&0!"%	"&0@A%
F+%	A&B"%	@&!"%	"&+0"%	"&+-0%
G%	A&-"%	A&,-%	"&+@!%	"&+0-%

%

Marking Diagram

Ordering information

Model name	Package	Unit Weight	Base Quantity	Packing Quantity
YFW13003AF	TO-220F	0.06oz(1.74g)	50pcs/tube	1000PCS/Box 5000PCS/Carton

Package Dimensions

TO-220F

Symbol	Millimeter		Inches	
	Min.	Max.	Min.	Max.
A	4.50	4.90	0.177	0.193
A1	2.34	2.74	0.092	0.108
A2	2.66	2.86	0.105	0.113
b	0.75	0.85	0.030	0.033
b1	1.24	1.44	0.049	0.057
c	0.40	0.60	0.016	0.024
D	10.00	10.32	0.394	0.406
E	15.75	16.05	0.620	0.632
e	2.44	2.64	0.096	0.104
e1	4.88	5.28	0.192	0.208
F	3.10	3.5	0.122	0.138
L	13.50	13.90	0.531	0.547
L1	2.90	3.30	0.114	0.130

The information presented in this document is for reference only. GuangDong Youfeng Microelectronics Co.,Ltd. reserves the right to make changes without notice for the specification of the products displayed herein to improve reliability, function or design or otherwise. The product listed herein is designed to be used with ordinary electronic equipment

hesele nap r esvce i, خه t w