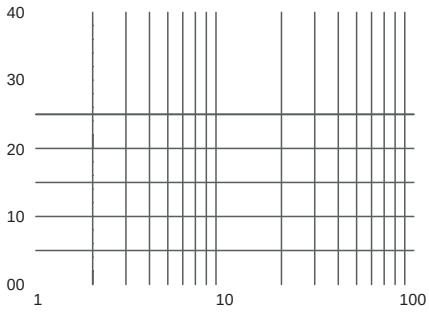
40
30
20
10
00
1
10
100

Marking Diagram

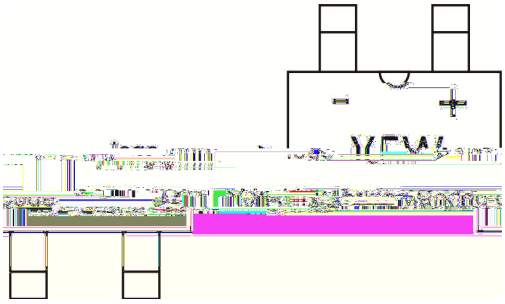

Ordering information

Package	Packing Description	Packing Quantity
MBL	Tape/Reel,13”reel	5000PCS/Reel 50000PCS/Carton

Package Dimensions

MBL

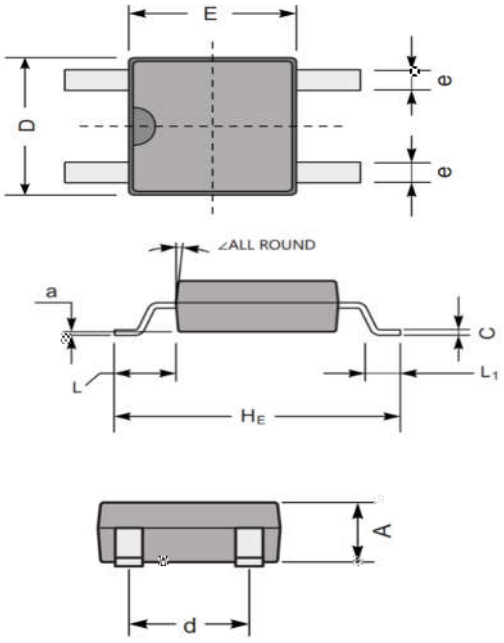

Dim.	Millimeter(mm)		(mil)	
	Min.	Max.	Min.	Max.
A	1.2	1.6	47	63
C	0.15	0.25	5.9	5.9
D	3.45	3.95	136	156
E	3.6	4.1	142	161
H_E	6.4	7.0	252	276
d	2.3	2.7	91	106
e	0.5	2.3	20	31
L	1.3	1.7	51	67
L1	0.5	1.1	20	43
a	0.2		8	
∠	7°			

The recommended mounting pad size

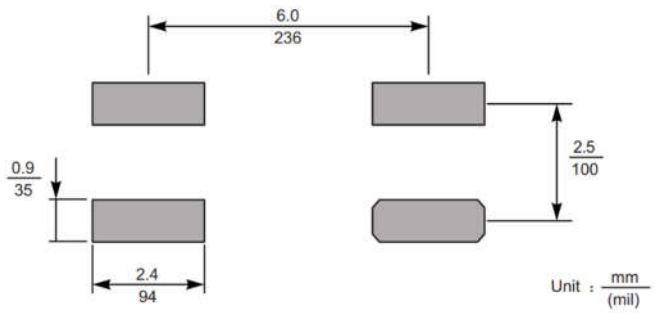

The information presented in this document is for reference only. GuangDong Youfeng Microelectronics Co.,Ltd. reserves the right to make changes without notice for the specification of the products displayed herein to improve reliability, function or design or otherwise. The product listed herein is designed to be used with ordinary electronic equipment or devices, and not designed to be used with equipment or devices which require high level of reliability and the malfunction of with would directly endanger human life (such as medical instruments, transportation equipment, aerospace machinery, nuclear-reactor controllers, fuel controllers and other safety devices),YFW or anyone on its behalf, assumes no responsibility or liability for any damages resulting from such improper use of sale. This publication supersedes & replaces all information previously supplied. For additional information, please visit our website https://www.yfwdiode.com, or consult YFW sales office for further assistance.