1.0A SURFACE MOUNT GLASS PASSIVATED BRIDGE RECTIFIER

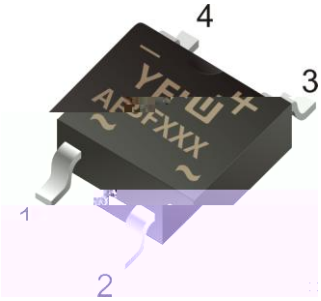

!"#$%&" $ ' %

%
%
%
%
%
%

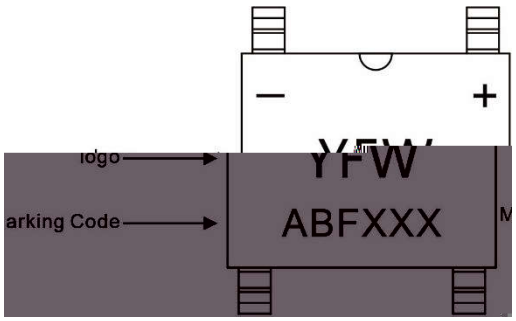

%
%

( )* "#$%"#+, ' -",#%

. /! $*%	. /!"#$%&*0/ "1-",#%	. /!"#$%23 #-"-4%
567%	Tape/Reel,13”reel	5000PCS/Reel 50000PCS/Carton

%

. /! $*%&" ' *#0",#0% %

567%

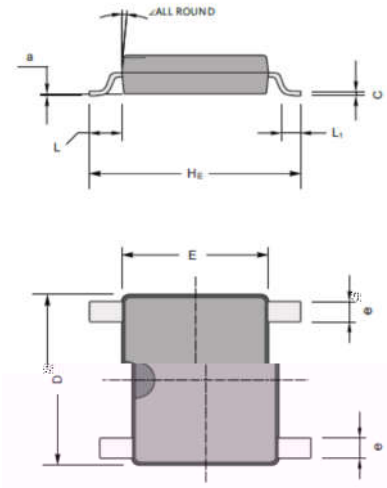

&" ' 8%	"99" ' *-* : ' ';%		: ' "9;%	
	"#8	<8%	"#8%	<8
A	1.0	1.2	39	47
C	0.15	0.22	5.9	8.7
D	4.9	5.2	193	205
E	4.2	4.5	166	177
HE	6.0	6.4	236	252
d	3.8	4.2	150	165
e	0.5	0.7	20	28
L	0.95		37	
L1	0.6		24	
a	0.2		8	
∠	7°			

=>*% */, ' '*#)*)%' ,3#-"#$%1)%0"?*%

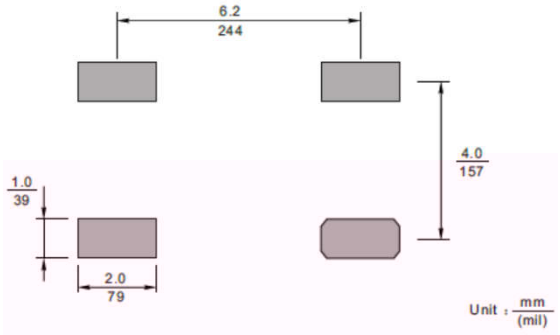

The information presented in this document is for reference only. GuangDong Youfeng Microelectronics Co.,Ltd. reserves the right to make changes without notice for the specification of the products displayed herein to improve reliability, function or design or otherwise. The product listed herein is designed to be used with ordinary electronic equipment or devices, and not designed to be used with equipment or devices which require high level of reliability and the malfunction of with would directly endanger human life (such as medical instruments, transportation equipment, aerospace machinery, nuclear-reactor controllers, fuel controllers and other safety devices),YFW or anyone on its behalf, assumes no responsibility or liability for any damages resulting from such improper use of sale. This publication supersedes & replaces all information previously supplied. For additional information, please visit our website https://www.yfwdiode.com, or consult YFW sales office for further assistance.