for high speed switching application

1SS400WT **A**

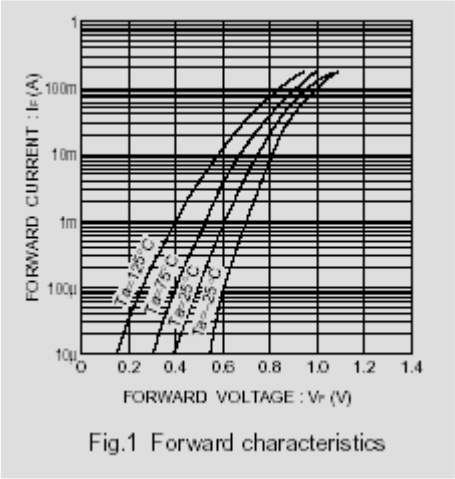

Fig.1 Forward characteristics

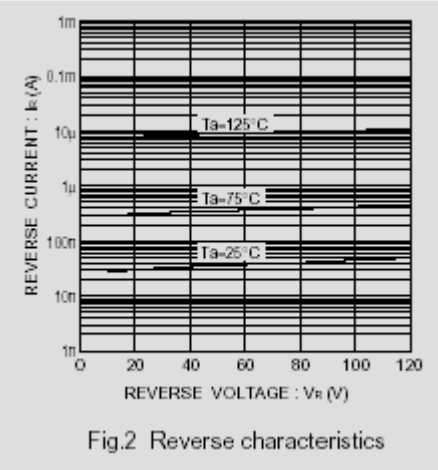

Fig.2 Reverse characteristics

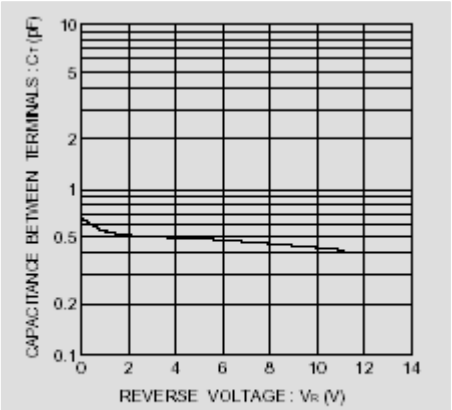

Fig.3 Capacitance between terminals

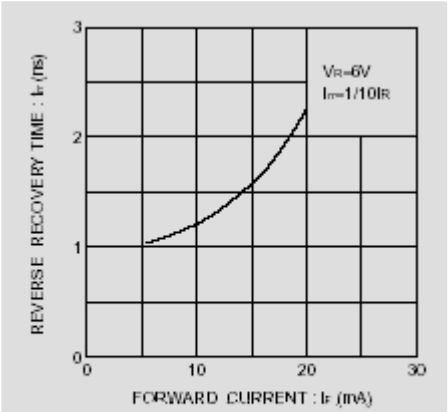

Fig.4 Reverse recovery time characteristics

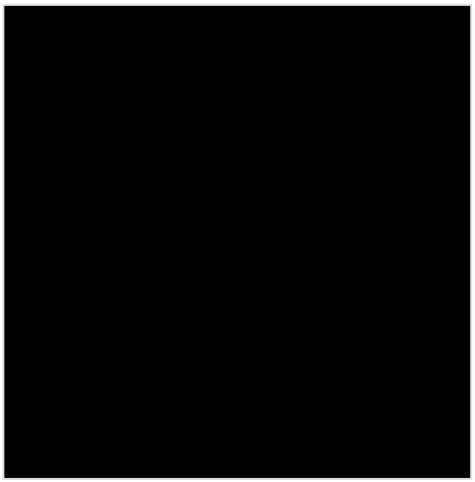

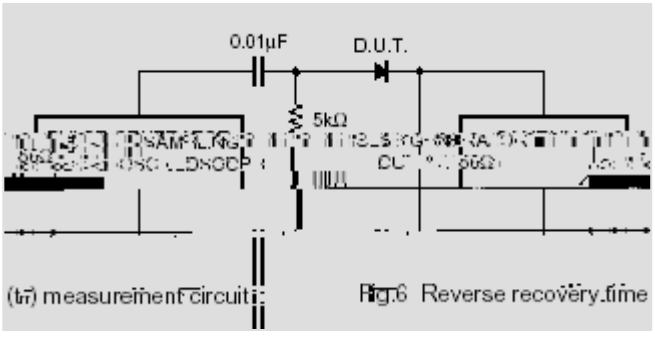

(trr) measurement circuit

Fig.6 Reverse recovery time