ES1AF THRU ES1JF SMAF

Surface Mount Superfast Recovery Rectifier

Reverse Voltage - 50 to 600 V

Forward Current - 1 A

Pinning

1.Cathode	2.Anode



SMAF

FEATURES

Glass Passivated Chip Junction
For surface mounted applications
Low profile package
Superfast reverse recovery time
Lead free in comply with EU RoHS 2011/65/EU directives

MECHANICAL DATA

Case: SMAF
Terminals: Solderable per MIL-STD-750, Method 2026
Approx. Weight: 27mg /0.00095oz

YFW ES1A
YFW ES1B
YFW ES1D
YFW ES1G
YFW ES1J

Absolute Maximum Ratings and characteristics

Ratings at 25 °C ambient temperature unless otherwise specified.
Single phase

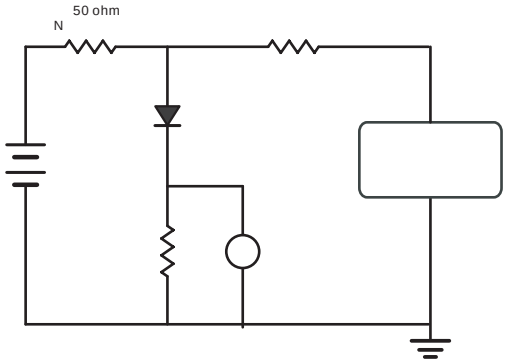

Fig.3 Typical Reverse Characteristics

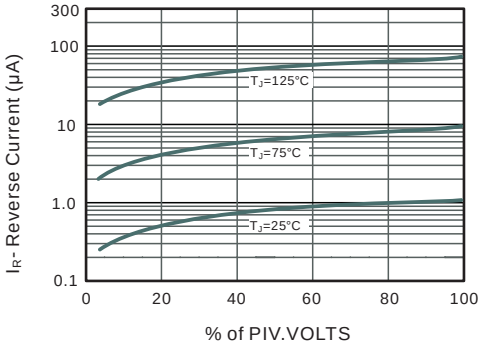

The information presented in this document is for reference only. GuangDong Youfeng Microelectronics