SSL56BF SMBF

Surface Mount Schottky Barrier Rectifier

Reverse Voltage - 60 V

Forward Current - 5 A

FEATURES

Pinning

1.Cathode	2.Anode





SMBF

Marking Code	
SSL56BF	YFW SL56B

MECHANICAL DATA

Absolute Maximum Ratings and Electrical characteristics
Ratings at 25 ° ambient temperature unless otherwise specified.Single phase, half wave, 60Hz resistive or inductive load, for capacitive load, derate by 20 %

Parameter	Symbols	SSL56BF	Units
	V_{RRM}		V
	V_{RMS}		V
	V_{DC}		V
	$I_{F(AV)}$		A
	I_{FSM}		A
	V_F		V
A A	I_R		mA
	C_j		pF
( )	θJA		°C/W
	j		°C
	stg		°C

( )
( )

Fig.3 Typical Forward Characteristic

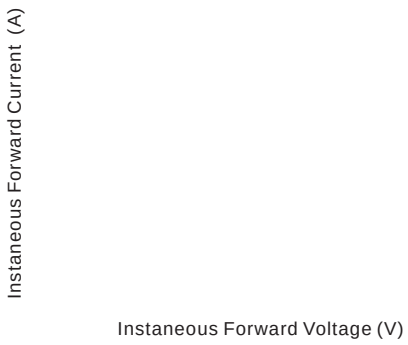

Fig.4 Typical Junction Capacitance

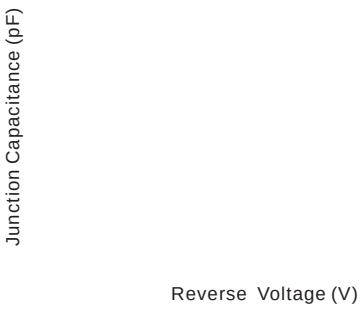

Fig.6- Typical Transient Thermal Impedance

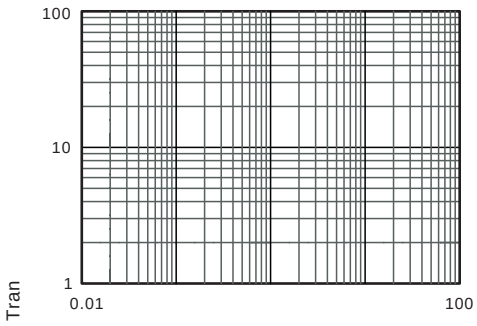

Marking Diagram

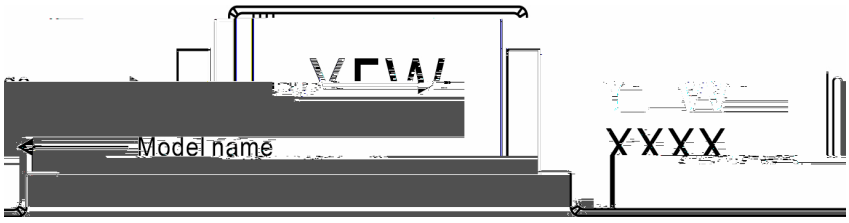

Ordering information

Package	Packing Description	Packing Quantity
SMBF	Tape/Reel,13"reel	5000PCS/Reel 50000PCS/Carton

Package Dimensions

SMBF

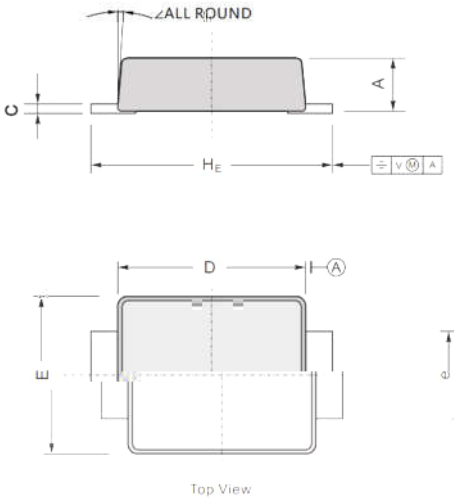

Dim.	Millimeter(mm)		mil	
	Min.	Max.	Min.	Max.
A	1.1	1.3	43	51
C	0.18	0.26	7	10
D	4.2	4.4	165	173
E	3.5	3.7	138	146
H_E	5.1	5.5	200	216
e	2.2	1.9	75	86
g	1.0		40	
	9°			

The recommended mounting pad size

