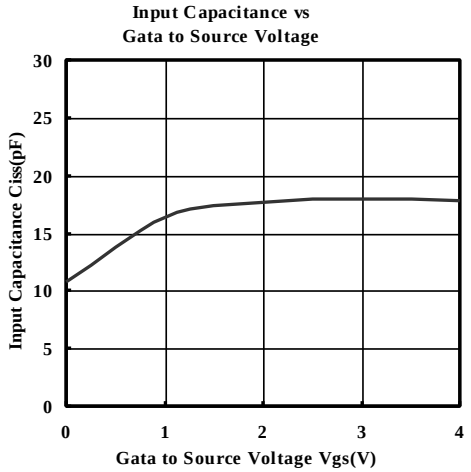
Input Capacitance vs
Gata to Source Voltage
Input Capacitance Ciss(pF)
30
25
20
15
10
5
0
0
1
2
3
4
Gata to Source Voltage Vgs(V)

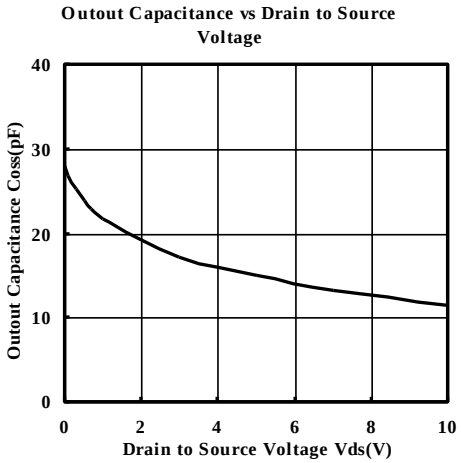
Outout Capacitance vs Drain to Source
Voltage
Outout Capacitance Coss(pF)
40
30
20
10
0
0
2
4
6
8
10
Drain to Source Voltage Vds(V)

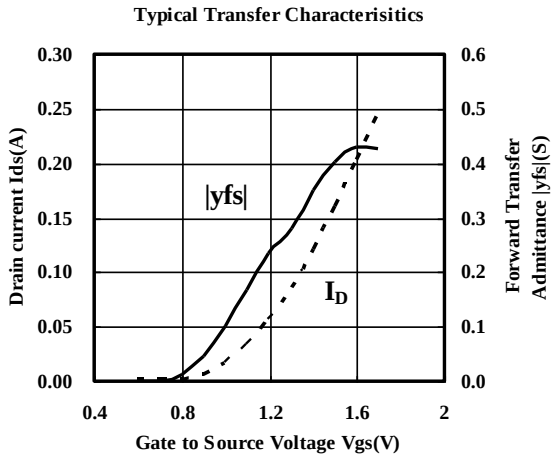
Typical Transfer Characterisitics
Drain current Ids(A)
0.30
0.25
0.20
0.15
0.10
0.05
0.00
0.6
0.5
0.4
0.3
0.2
0.1
0.0
Forward Transfer
Admittance |yfs|(S)
|yfs|
I_D
0.4
0.8
1.2
1.6
2
Gate to Source Voltage Vgs(V)

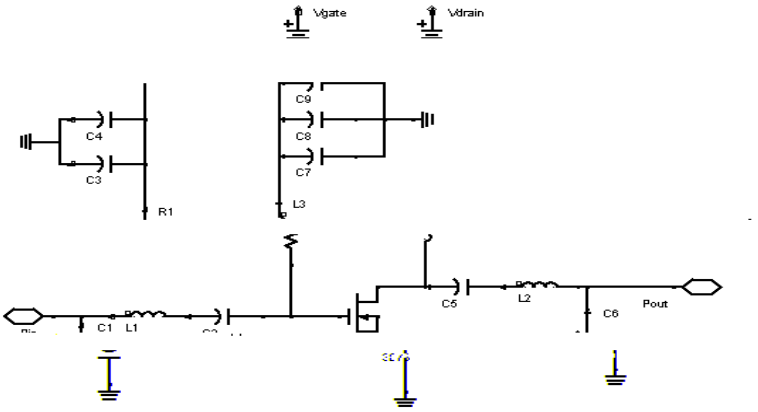

C1	10	pF
C2,C5	100	pF
C3,C7	1000	pF
C4,C8	10000	pF
C6	12	pF
C9	4.7	ÕF
R1	360	q
L1	10	nH
L2	3.3	nH
L3	5-turn coil ∧=2mm	

f=450MHz, V_{DS}=5V, I_{DQ}=

f=450MHz, Vds=5V, Pin=15dBm

